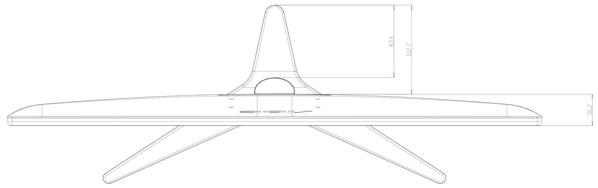

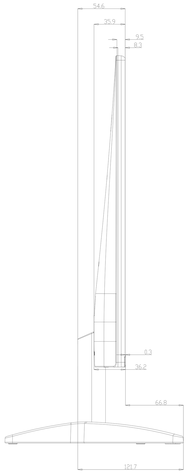

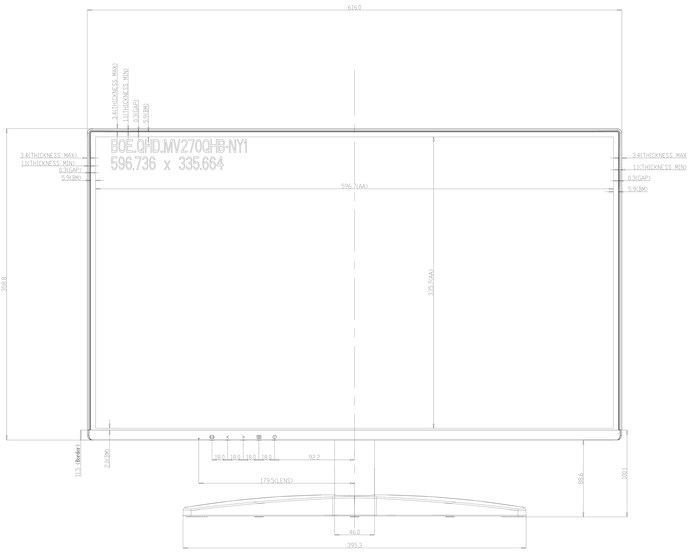

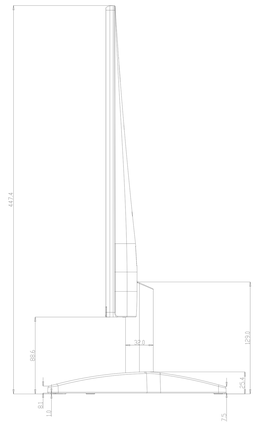

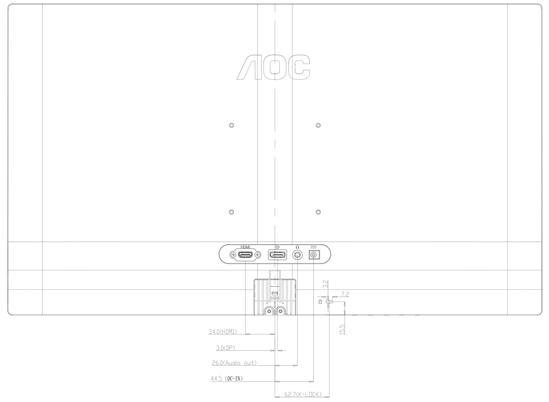

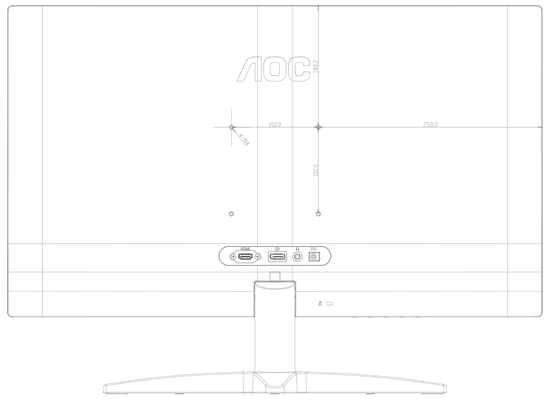

TILT:-5°~23°

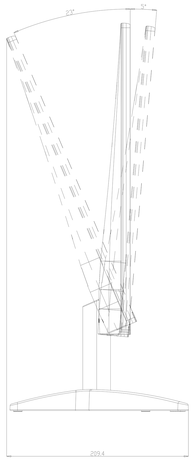

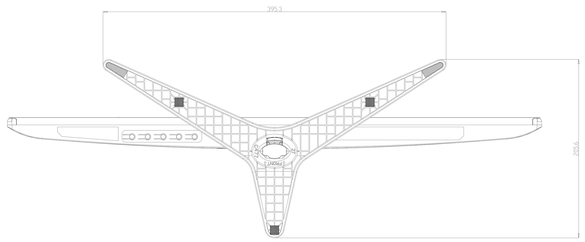

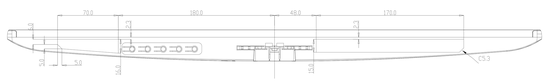

Model: Q27B36X	Draw: Zhiyun.Chen		
Unit mm	Q27B36X SHT191		
SCALE 1:1	3rd PROJ.	SPEC: TILT:-5°~23°	
SUPERS	AOC		1-1
DATE 29-JUL.-25		FQ	MNT

RoHS