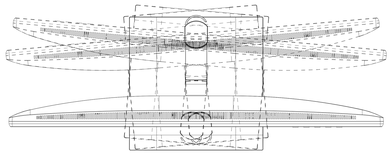

Swivel:±175°

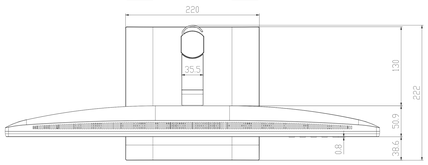

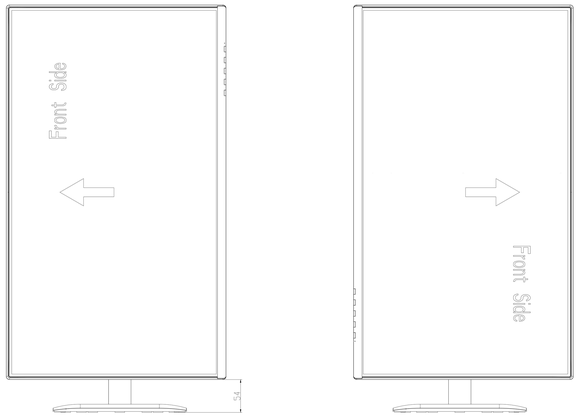

Pivot:±90°

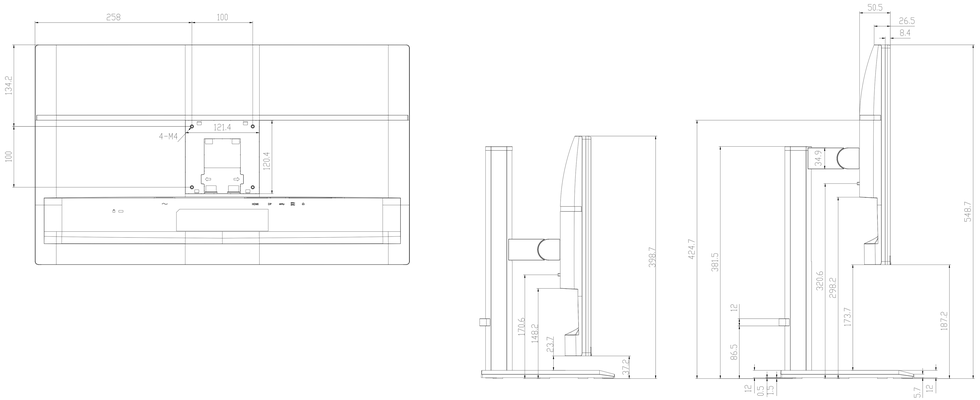

Lift:150mm

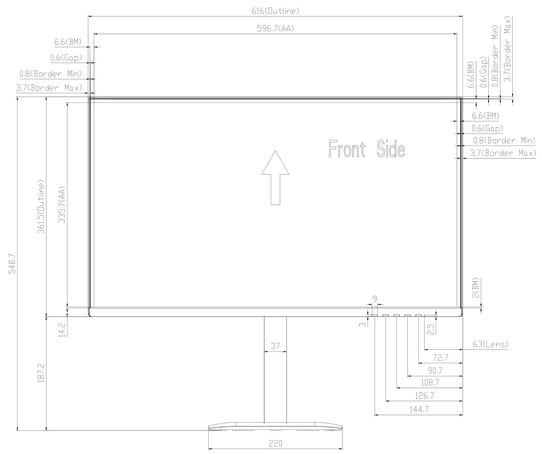

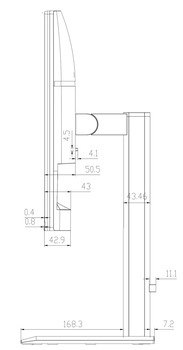

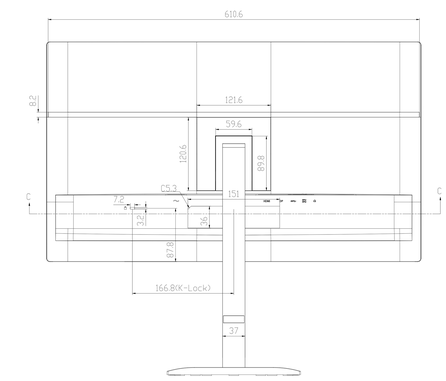

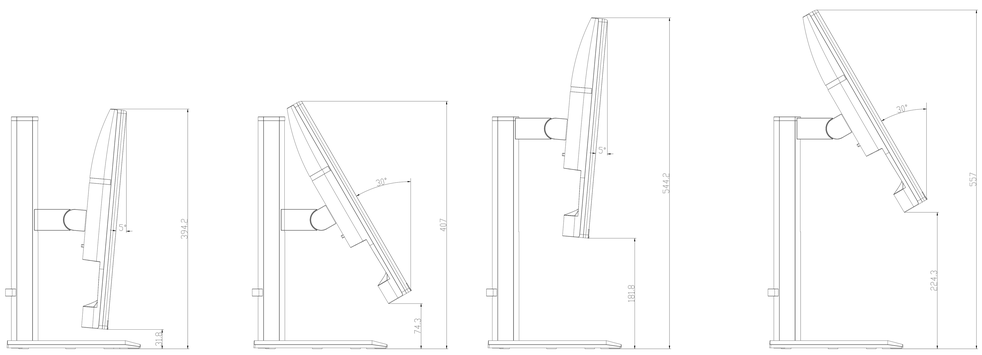

Tilt:-5°~30°

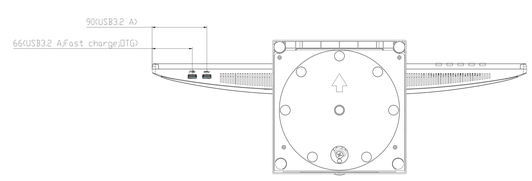

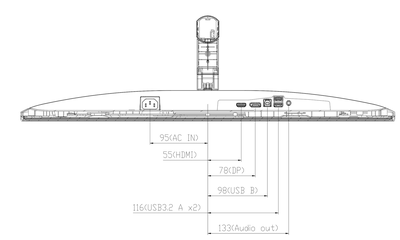

SECTION C-C

Model: Q27E4U		Draw: Henry	
Unit mm	Q27E4U_SHT191		
SCALE 1:1	3rd PROJ.	SPEC: 1.Tilt:-5°~30° 2.Pivot:±90° 3.Swivel:±175° 4.Lift:150mm	
SUPERS		AOC	1-1
DATE	17_Feb_2025	TP	MNT