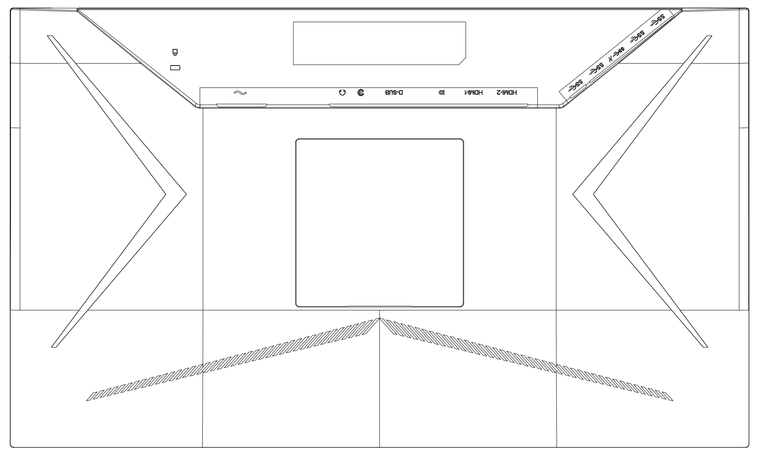

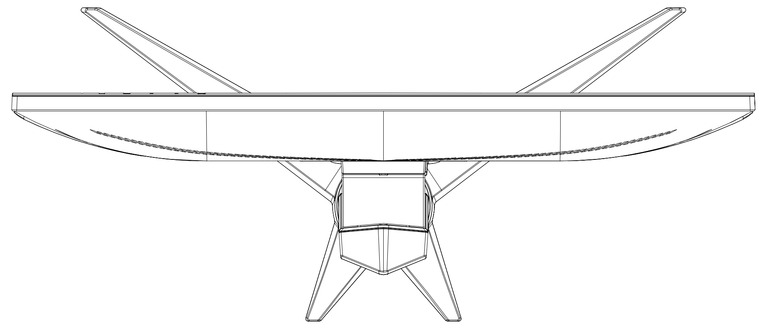

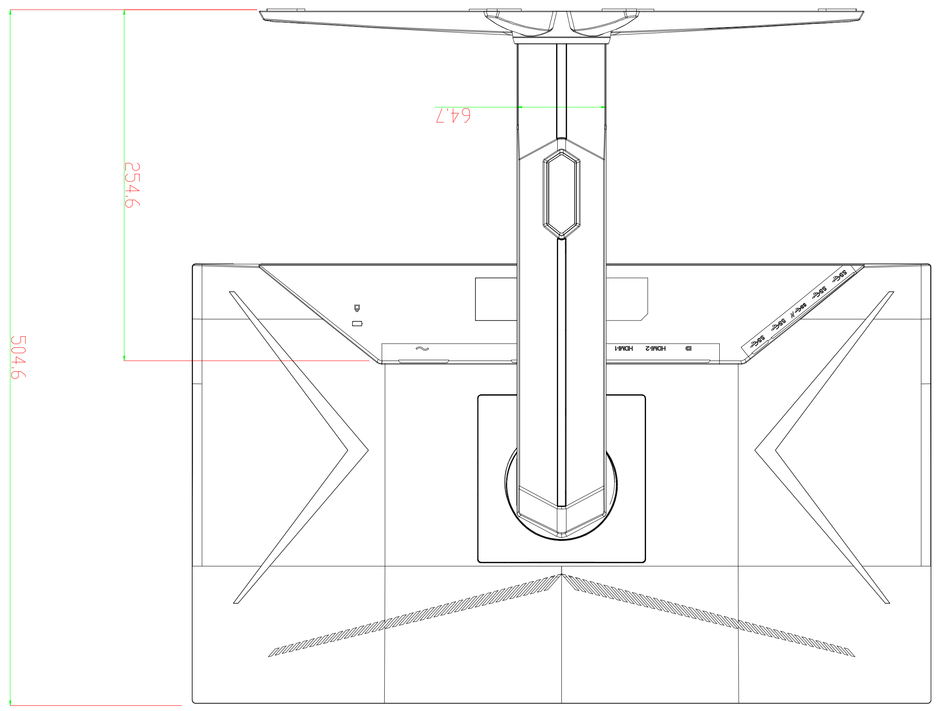
64.7
254.6
504.6

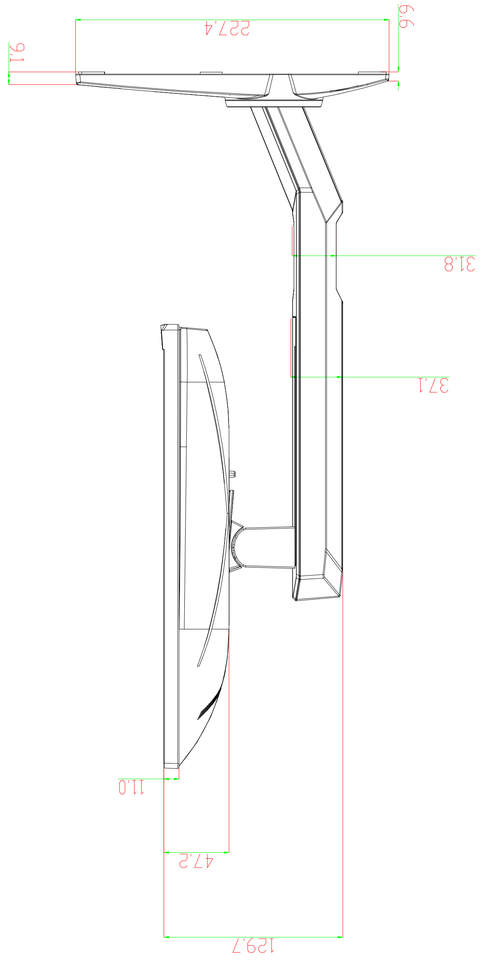
227.4
9.1
6.6
31.8
37.1
11.0
47.2
129.7

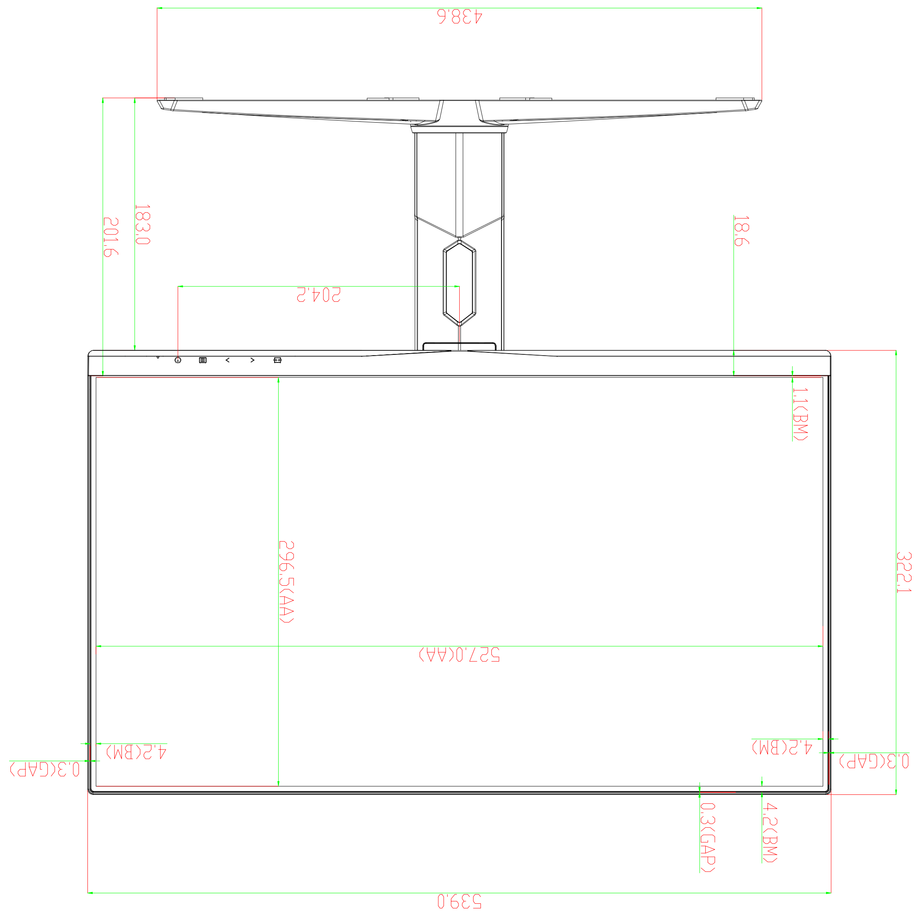
438.6
183.0
201.6
18.6
204.2
1.1(BM)
322.1
296.5(AA)
527.0(AA)
4.2(BM)
0.3(GAP)
0.3(GAP)
4.2(BM)
539.0

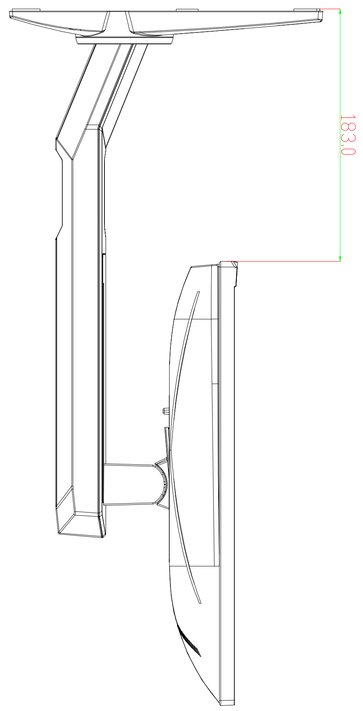
183.0

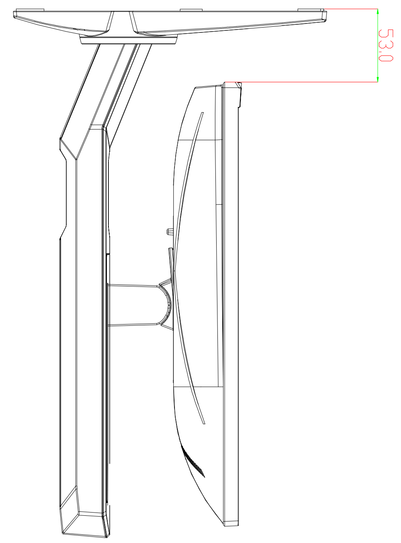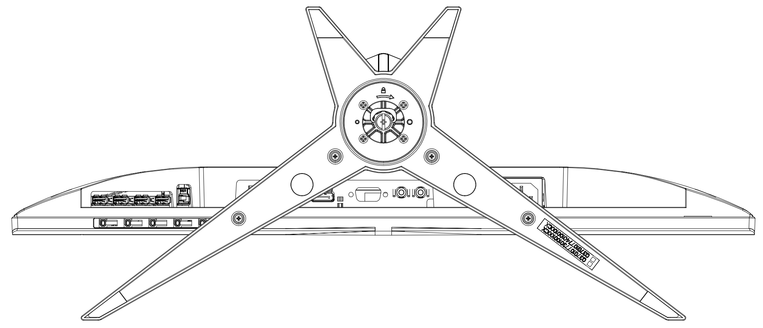
53.0