REVISION LIST							
ITEM	ECN NO	POSITION	DESCRIPTION		DATE	UPDATED BY	APPROVED BY
			WHO	WE			

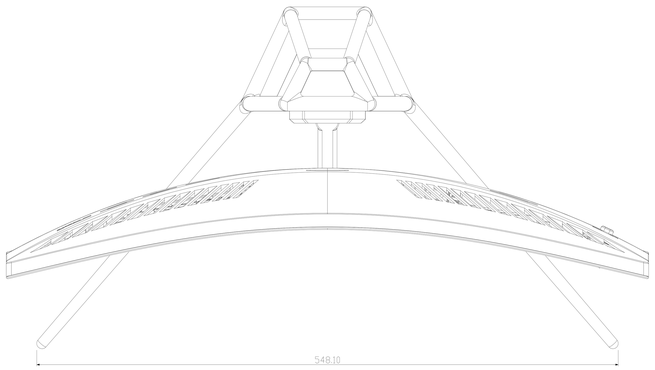

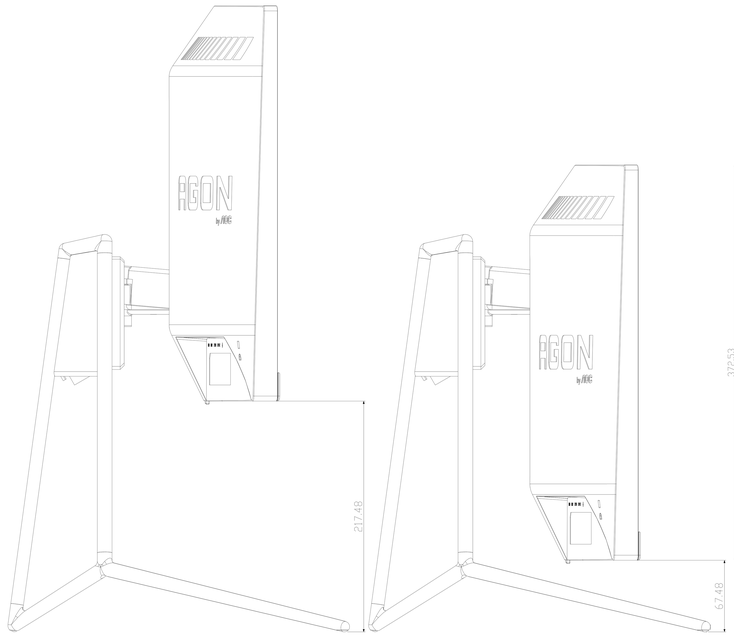

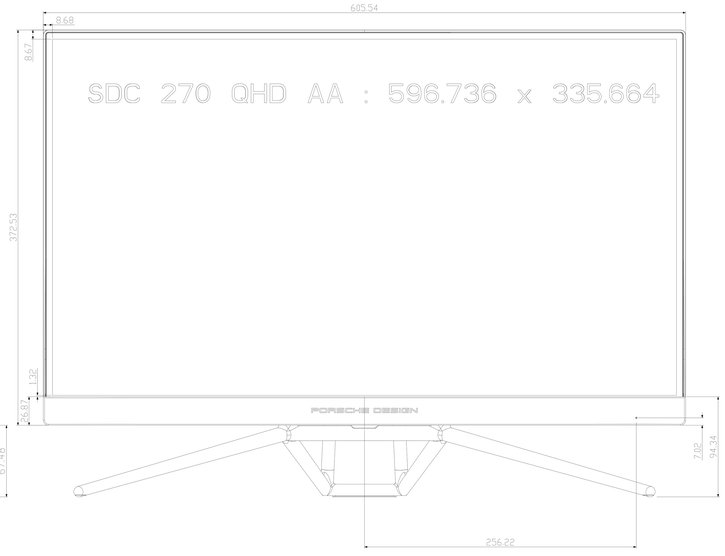

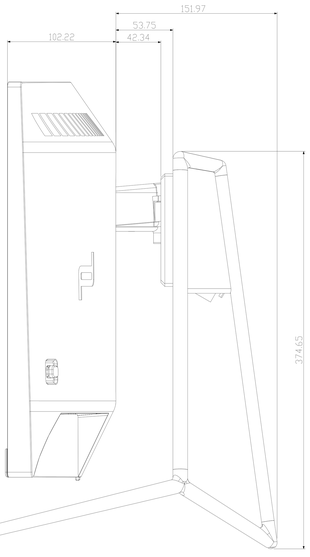

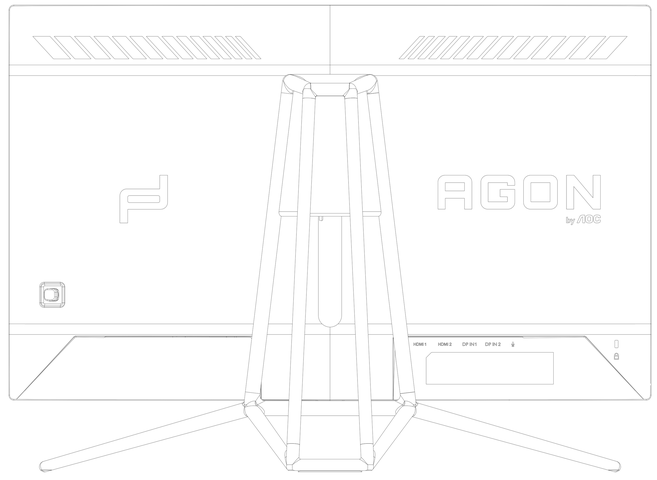

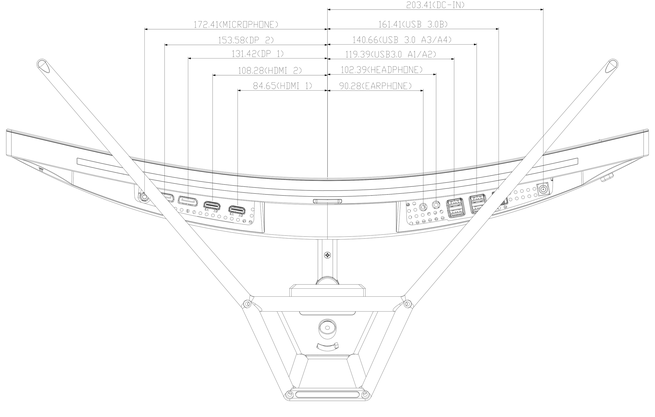

RoHS

			MODEL:		PROE ID: 2.7527_A1		PROE ID:40-AOC-P527-CMF
TOLERANCE UNLESS OTHERWISE SPECIFIED mm							
RANGE OF DIM	METAL & PLASTIC	POLYCARB	UNITS	PLAN	TOLERANCE UNLESS OTHERWISE SPECIFIED (MM) ±0.1		
0~3	±0.05						
3~6	±0.06						
6~10	±0.07						
10~18	±0.08	±0.12					
18~30	±0.09						
30~50	±0.10						
50~80	±0.12						
80~120	±0.15	±0.20					
120~250	±0.20	±0.25					
MOLD CHECK METAL		±0.07			17-Dec-19	TPCPN0200V	
Internal Diameter of Plastic Screw Boss		±0.05					