AOC C24G1A

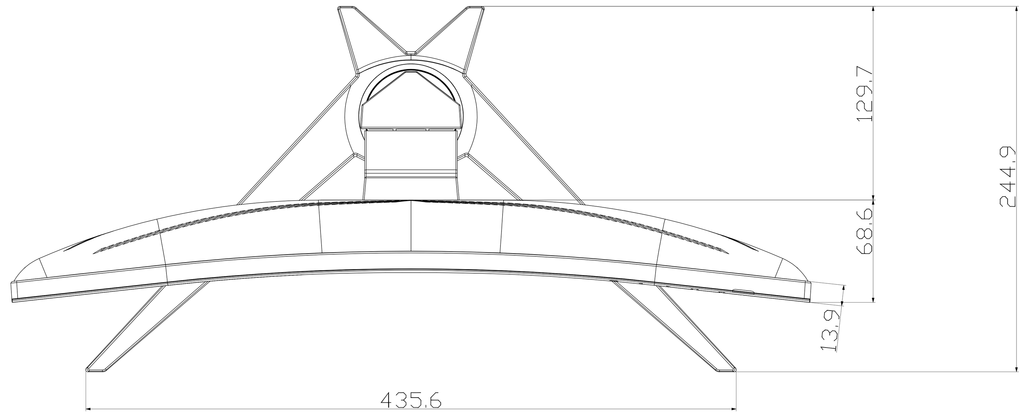
129.7
244.9
68.6
13.9
435.6

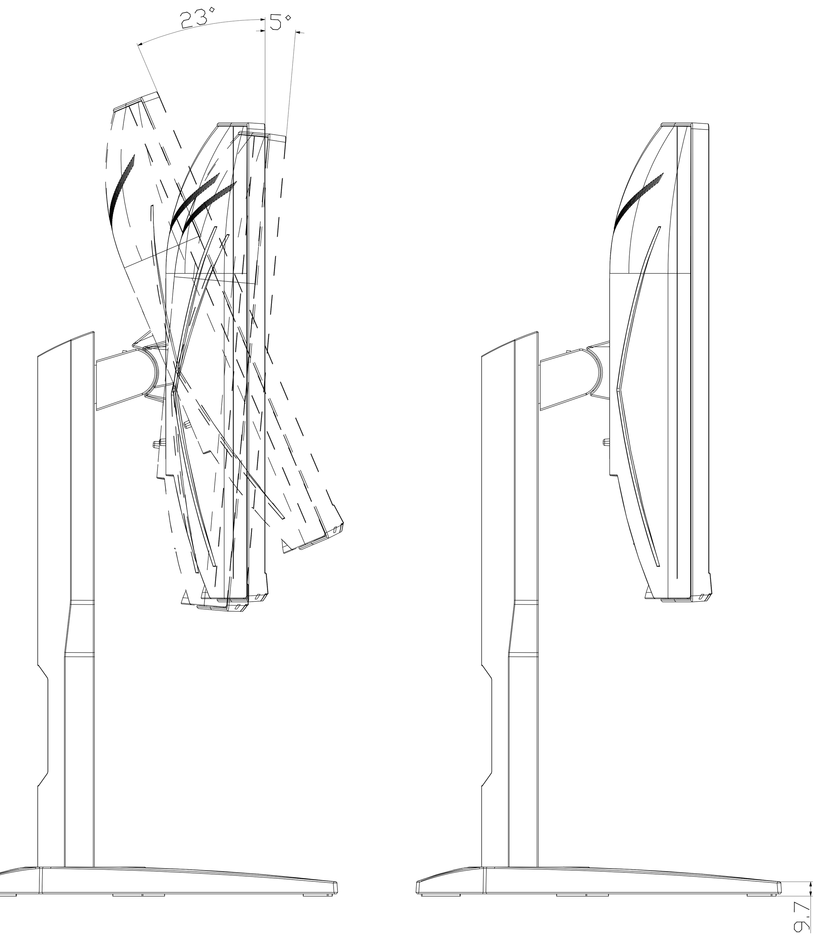
23°
5°
9.7

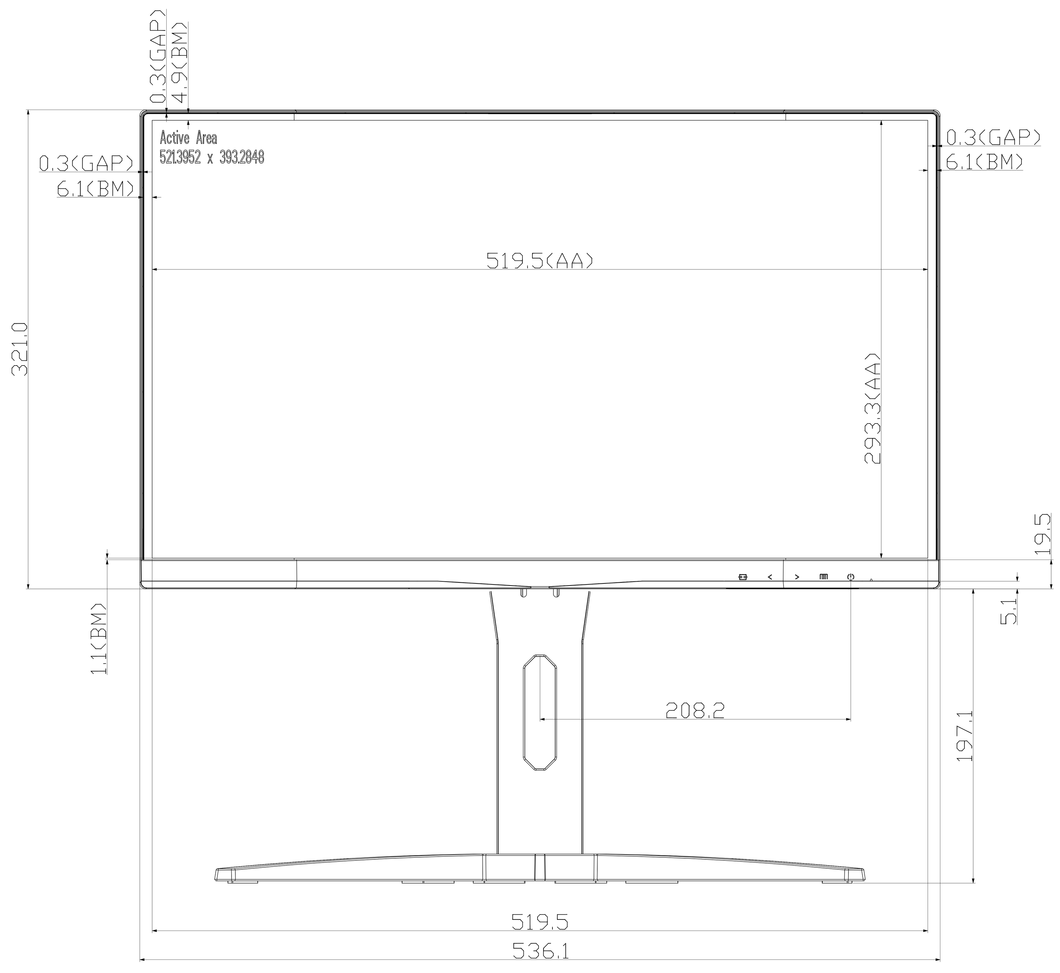
0.3(GAP)
4.9(BM)
Active Area
5213952 x 3932040
0.3(GAP)
6.1(BM)
0.3(GAP)
6.1(BM)
519.5(AA)
321.0
293.3(AA)
19.5
5.1
11(BM)
208.2
197.1
519.5
536.1

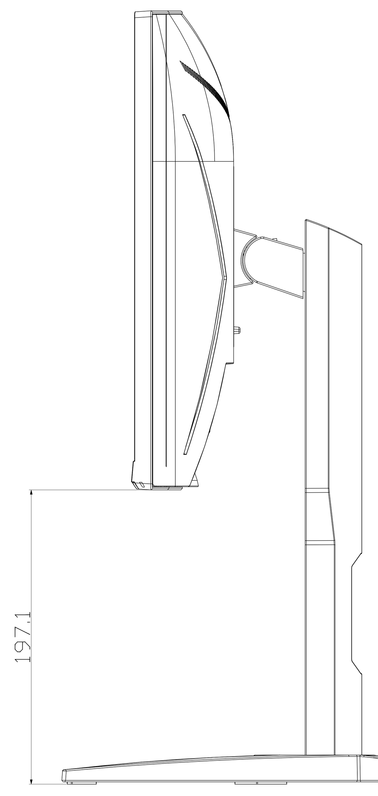
197.1

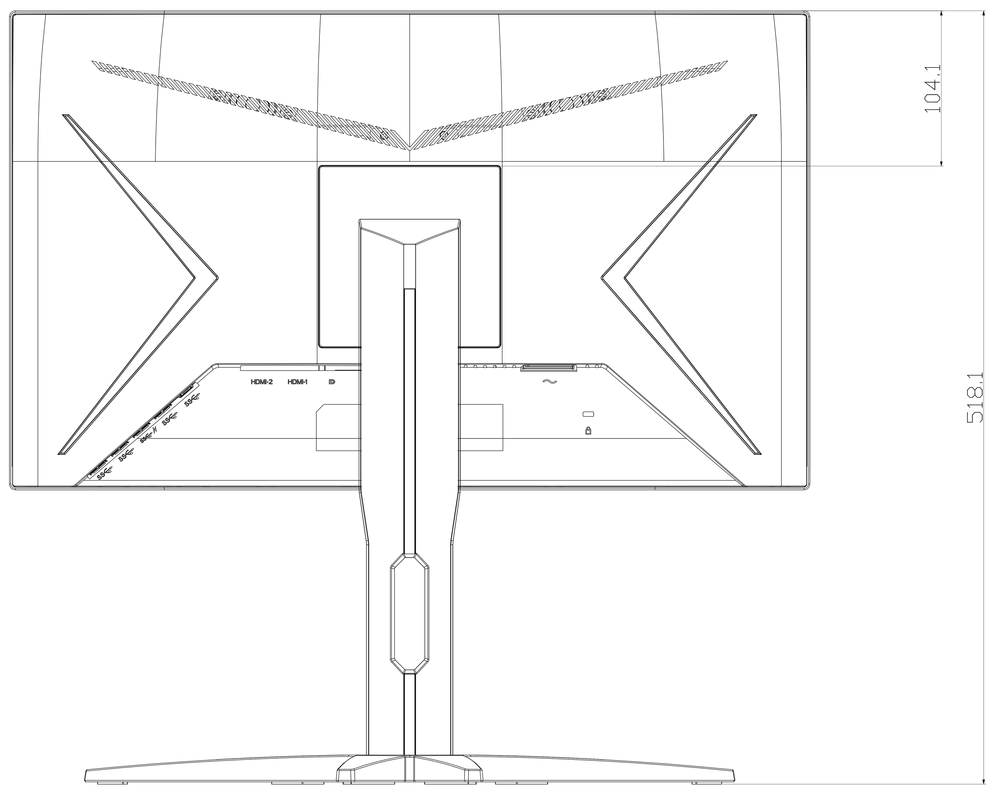
104.1
518.1
HDMI-2
HDMI-1

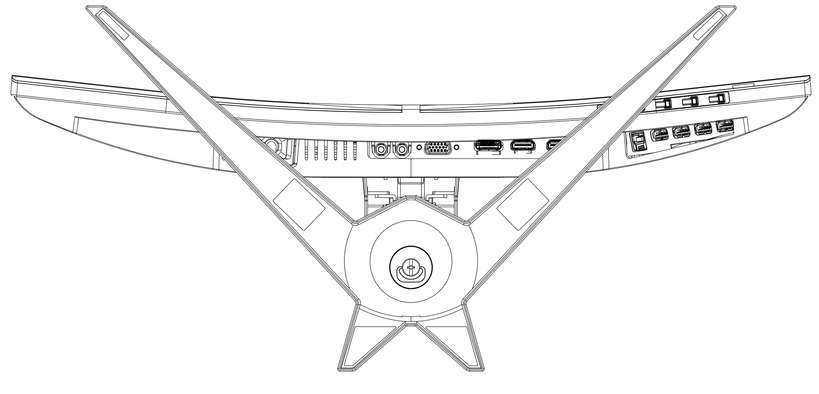

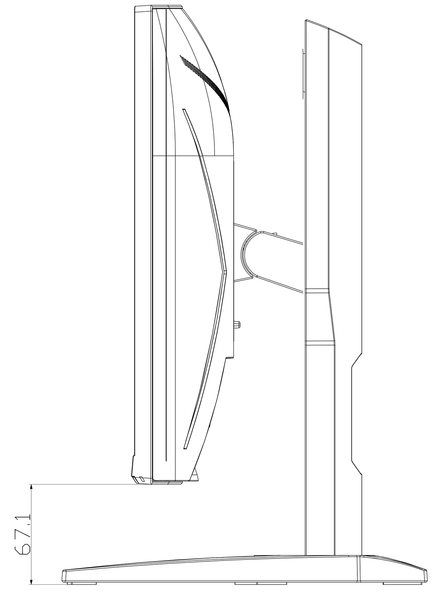
67.1

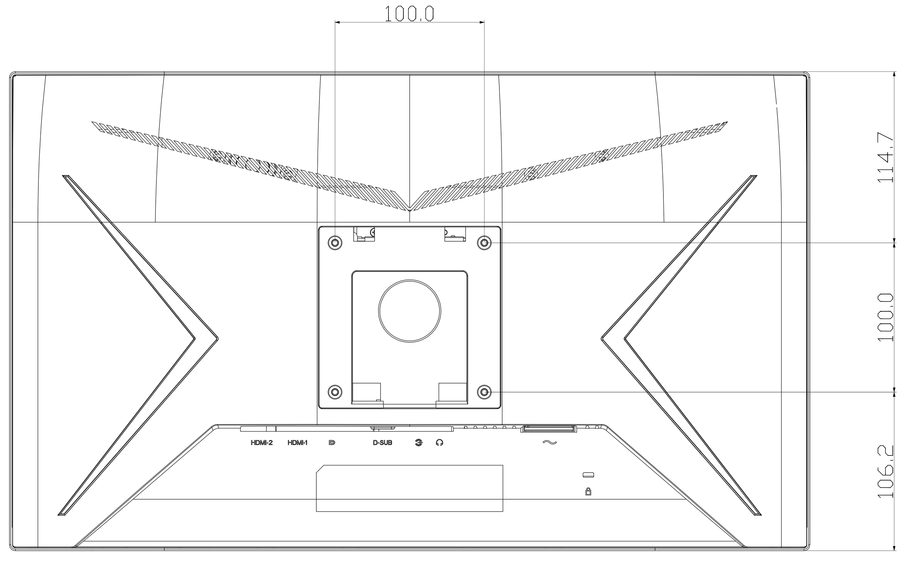
100.0
114.7
100.0
106.2
HDMI-2
HDMI-1
D-SUB