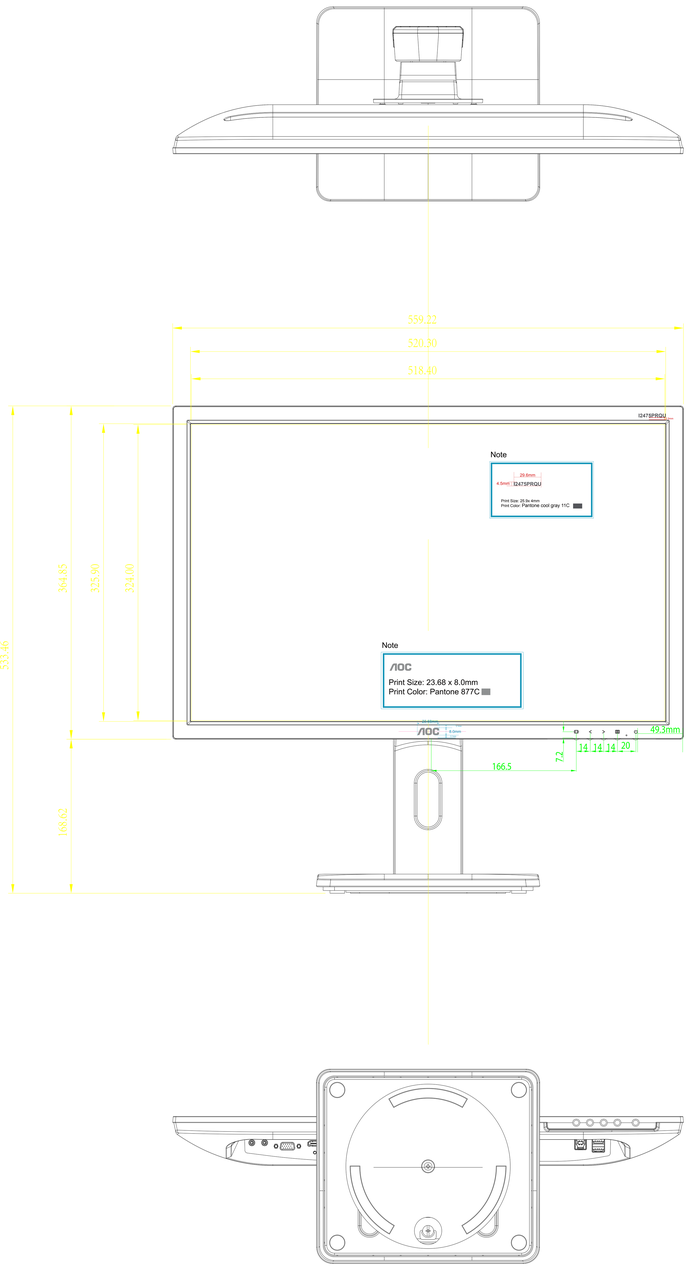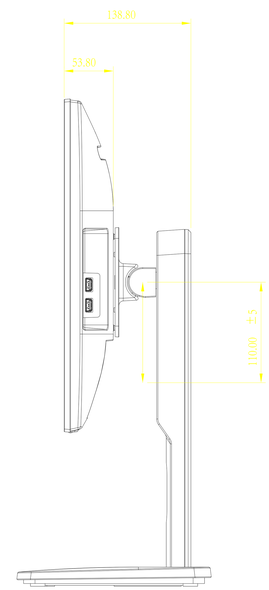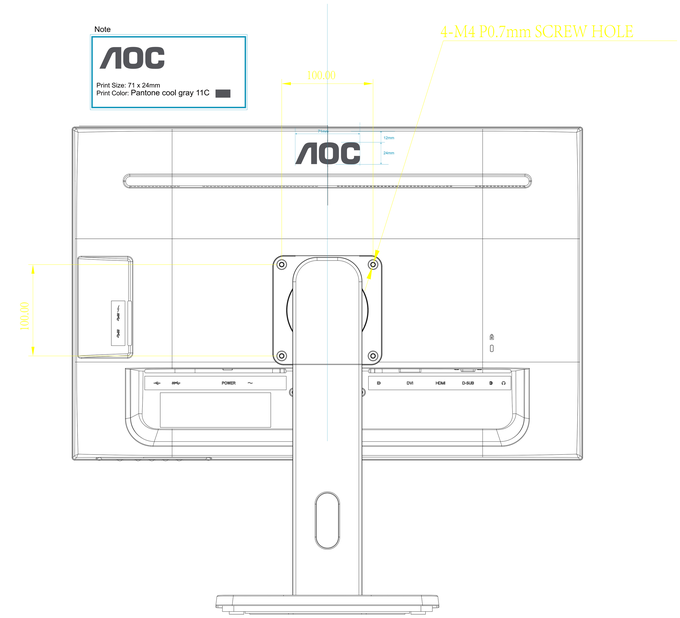AOC I2475PRQU silkscreen
Model:L24CSBHMB5P0
PN:L24CSBHMB5P000
date:2z 016.1.78.29